Ending nuts

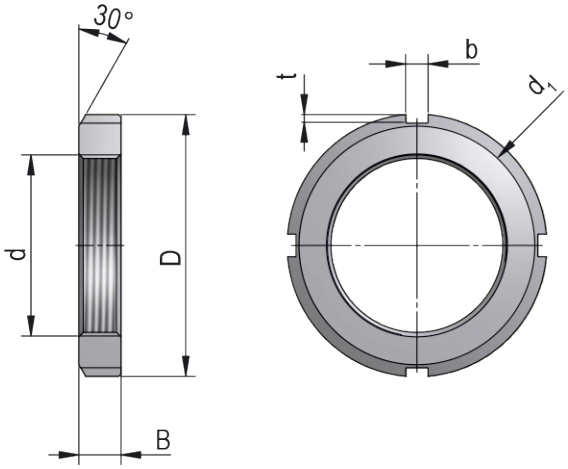

Sleeve Designation	KM15

Appropriate Components	
Locking Washer	MB15

Dimensions (mm)

d	M75x2
d_1	90
D	98
B	13
b	8
t	3,5
	-

Weight [kg]	0,300

ZVL SLOVAKIA, a.s. • Na stanicu 22 • 010 09 Žilina • Slovakia
phone.: +421 41 707 60 32 • fax: +421 41 707 60 24
sales.zvl@zvlslovakia.sk • www.zvlslovakia.sk