# Oval Flanged Cast Housing Unit - FM type

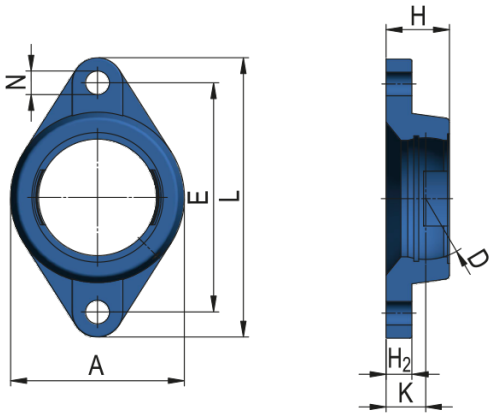


| Housing Unit Designation | FM210; FMC210 |
|---|---|

**Dimensions (mm)**

| | |
|---|---|
| A | 115 |
| D | 90 |
| E | 157 |
| L | 197 |
| H | 40 |
| K | 22 |
| $H_2$ | 15 |
| N | 19 |

| | |
|---|---|
| Weight [kg] | 1,25 |

ZVL SLOVAKIA, a.s. • Na stanicu 22 • 010 09 Žilina • Slovakia
phone.: +421 41 707 60 32 • fax: +421 41 707 60 24
sales.zvl@zvlslovakia.sk • www.zvlslovakia.sk