Oval Flanged Cast Housing Unit - FM type

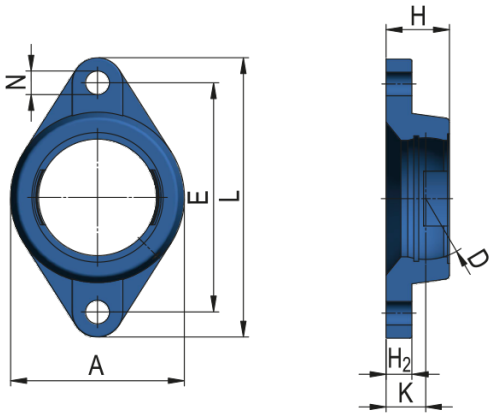

Housing Unit Designation	FM217; FMC217

Dimensions (mm)

A	190
D	150
E	248
L	305
H	63
K	36
H_2	25
N	25

Weight [kg]	4,84

ZVL SLOVAKIA, a.s. • Na stanicu 22 • 010 09 Žilina • Slovakia
phone.: +421 41 707 60 32 • fax: +421 41 707 60 24
sales.zvl@zvlslovakia.sk • www.zvlslovakia.sk