Oval Flanged Cast Housing Unit - FM type

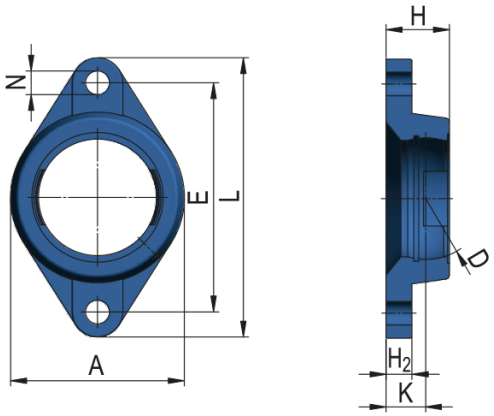

Housing Unit Designation	FM214; FMC214

Dimensions (mm)

A	160
D	125
E	216
L	265
H	54
K	31
H_2	22
N	23

Weight [kg]	3,20

ZVL SLOVAKIA, a.s. • Na stanicu 22 • 010 09 Žilina • Slovakia
phone.: +421 41 707 60 32 • fax: +421 41 707 60 24
sales.zvl@zvlslovakia.sk • www.zvlslovakia.sk