Oval Flanged Cast Housing Unit - FM type

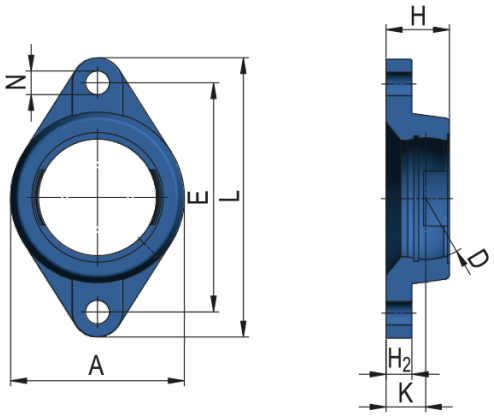

Housing Unit Designation	FM212; FMC212

Dimensions (mm)

A	138
D	110
E	202
L	248
H	48
K	29
H_2	18
N	23

Weight [kg]	2,11

ZVL SLOVAKIA, a.s. • Na stanicu 22 • 010 09 Žilina • Slovakia
phone.: +421 41 707 60 32 • fax: +421 41 707 60 24
sales.zvl@zvlslovakia.sk • www.zvlslovakia.sk