# Square Flanged Housing Unit - FG type

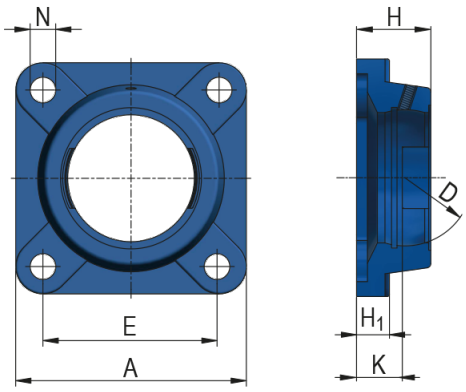


| | |
|---|---|
| **Housing Unit Designation** | ; |

**Dimensions (mm)**

| | |
|---|---|
| **A** | |
| **D** | |
| **E** | |
| **H** | |
| **$H_1$** | |
| **N** | |
| **K** | |

| | |
|---|---|
| **Weight [kg]** | |

ZVL SLOVAKIA, a.s. • Na stanicu 22 • 010 09 Žilina • Slovakia
phone.: +421 41 707 60 32 • fax: +421 41 707 60 24
sales.zvl@zvlslovakia.sk • www.zvlslovakia.sk