Insert ball bearings

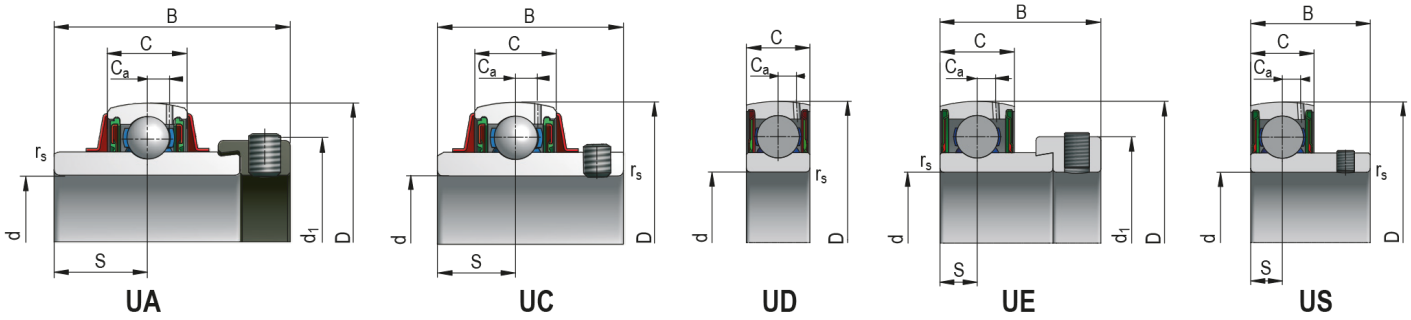

Bearing Designation	UC206R3

Dimensions (mm)

d	30	r_s min	1,5
D	62	d_1 max	-
B	38,1	S	15,9
C_s	19	C_a	5

Basic Load Rating (kN)

C	19,45
C_0	11,26

Radial Clearance C3 (mm)

min	0,012
max	0,028

Weight [kg]	0,320

ZVL SLOVAKIA, a.s. • Na stanicu 22 • 010 09 Žilina • Slovakia
phone.: +421 41 707 60 32 • fax: +421 41 707 60 24
sales.zvl@zvlslovakia.sk • www.zvlslovakia.sk

Tolerance Symbols and Their Meaning

- d nominal bore diameter
- d_1 nominal diameter of larger theoretical tapered bore diameter
- d_2 nominal diameter of the shaft washer of double direction thrust bearings
- Δ_{ds} deviation of single bore diameter from nominal
- Δ_{dmp} mean cylindrical bore diameter deviation in single radial plane (for tapered bore Δ_{dmp} is valid for theoretical bore diameter)
- Δ_{d1mp} deviation of mean larger theoretical diameter of tapered bore
- Δ_{d2mp} mean shaft washer bore diameter deviation of double direction thrust bearings in single radial plane
- V_{dp} single bore diameter variation in single radial plane
- V_{dmp} mean cylindrical bore diameter variation
- V_{d2p} shaft washer bore diameter variation of double direction thrust bearings in single radial plane
- D nominal outside diameter
- Δ_{Ds} deviation of single outside diameter from the nominal dimension
- Δ_{Dmp} mean outside cylindrical surface diameter deviation in single plane
- V_{Dp} single outside cylindrical surface diameter variation in single radial plane
- V_{Dmp} mean outside cylindrical surface diameter variation
- B inner ring nominal width
- T total nominal width of tapered roller bearings
- T_1 nominal effective width of cup sub-unit
- T_2 nominal effective width of cone sub-unit
- H rated width of unidirectional axial bearing
- H_1 rated height of unidirectional ball axial bearing including the body ring
- H_2 rated height of bidirectional axial bearing
- H_3 rated height of bidirectional axial ball bearing including body rings
- H_4 rated height of spherical-roller bearing
- Δ_{Bs} inner ring single width deviation
- Δ_{Cs} outer ring single width deviation
- Δ_{Ts} bearing single width deviation (total)
- Δ_{T1s} cone sub-unit effective width deviation
- Δ_{T2s} cup sub-unit effective width deviation
- Δ_{Hs} height deviation of single direction axial bearings from nominal value
- Δ_{H1s} height deviation of single direction axial ball bearings with sphered housing washer from nominal value
- Δ_{H2s} height deviation of double direction axial bearings from nominal value
- Δ_{H3s} height deviation of double direction axial ball bearings with sphered housing washer from nominal value
- Δ_{H4s} height deviation of axial spherical-roller bearing from the rated value
- C outer ring nominal width
- V_{Bs} inner ring single width variation
- V_{Cs} outer ring single width variation
- K_{ia} radial runout of assembled bearing inner ring
- K_{ea} radial runout of assembled bearing outer ring
- S_i shaft washer raceway axial runout
- S_e housing washer raceway axial runout
- S_{ia} inner ring flat seat face axial runout of assembled bearing
- S_{ea} outer ring flat seat face axial runout of assembled bearing
- S_d flat seat face axial runout
- S_D runout of outside cylindrical surface towards outer ring face
- S_s runout of supporting face towards seat face for single row tapered roller bearings

ZVL SLOVAKIA, a.s. • Na stanicu 22 • 010 09 Žilina • Slovakia
phone.: +421 41 707 60 32 • fax: +421 41 707 60 24
sales.zvl@zvlslovakia.sk • www.zvlslovakia.sk