Full complement cylindrical roller bearings, type NNC, NNCL, NNCF

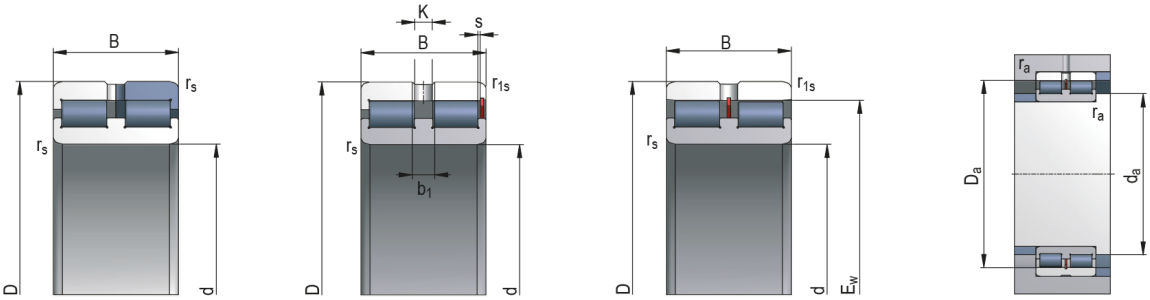

NNC NNCF NNCL

Bearing Designation	

Dimensions (mm)

d	
D	
B	
r_s min	
r_{1s} min	

Abutment and Fillet Dimensions (mm)

E_w		d_a min	
s		D_a max	
K		r_a max	
b_1			

Basic Load Rating (kN)

C	
C_0	

Limiting Speed for Lubrication (min^{-1})

Grease	
Oil	

Weight [kg]	

ZVL SLOVAKIA, a.s. • Na stanicu 22 • 010 09 Žilina • Slovakia
phone.: +421 41 707 60 32 • fax: +421 41 707 60 24
sales.zvl@zvlslovakia.sk • www.zvlslovakia.sk

Tolerance Class

Tolerance Class	Inner Ring														
	Cylindrical Bore										Tapered Bore 1:12				
	Δ_{dmp}		V Diameter Series			V_{dmp}	K_{ia}	Δ_{Bs}		V_{Bs}	Δ_{dmp}		$\Delta_{d1mp} - \Delta_{dmp}$		V_{dp} 1)
			7,8,9	0,1	2,3,4										
	max	min	max	max	max	max	max	max	min	max	max	min	max	min	max
	µm														
P0											-	-	-	-	-
P6															

Tolerance Class	Inner Ring									
	Tapered Bore 1:12					Tapered Bore 1:30				
	Δ_{dmp}		$\Delta_{d1mp} - \Delta_{dmp}$		V_{dp} 1)	Δ_{dmp}		$\Delta_{d1mp} - \Delta_{dmp}$		V_{dp} 1)
	max	min	max	min	max	max	min	max	min	max
	µm									
P0										

Tolerance Class	Outer Ring								
	Δ_{Dmp}		V_{Dp} Diameter Series			bearings 2) with seals	V_{Dmp}	K_{ea}	Δ_{CS}, V_{CS}
			7,8,9	0,1	2,3,4				
	max	min	max	max	max	max	max	max	
	µm								
P0									Corresponds to Δ_{BS}, V_{BS} of the same bearing inner ring
P6									

1) Valid in any bore radial plane

2) P0 - Valid only for bearings in diameter series 2, 3 and 4 * P6 - Valid only for bearings in diameter series 0, 1, 2, 3 and 4

Radial Clearance - Cylindrical Bore

C2		normal		C3		C4		C5	
min	max	min	max	min	max	min	max	min	max
µm									

Tolerance Symbols and Their Meaning

d nominal bore diameter
d_1 nominal diameter of larger theoretical tapered bore diameter
d_2 nominal diameter of the shaft washer of double direction thrust bearings
Δ_{ds} deviation of single bore diameter from nominal
Δ_{dmp} mean cylindrical bore diameter deviation in single radial plane (for tapered bore Δ_{dmp} is valid for theoretical bore diameter)
Δ_{d1mp} deviation of mean larger theoretical diameter of tapered bore
Δ_{d2mp} mean shaft washer bore diameter deviation of double direction thrust bearings in single radial plane
V_{dp} single bore diameter variation in single radial plane
V_{dmp} mean cylindrical bore diameter variation
V_{d2p} shaft washer bore diameter variation of double direction thrust bearings in single radial plane
D nominal outside diameter
Δ_{Ds} deviation of single outside diameter from the nominal dimension
Δ_{Dmp} mean outside cylindrical surface diameter deviation in single plane
V_{Dp} single outside cylindrical surface diameter variation in single radial plane
V_{Dmp} mean outside cylindrical surface diameter variation
B inner ring nominal width
T total nominal width of tapered roller bearings
T_1 nominal effective width of cup sub-unit
T_2 nominal effective width of cone sub-unit
H rated width of unidirectional axial bearing
H_1 rated height of unidirectional ball axial bearing including the body ring
H_2 rated height of bidirectional axial bearing
H_3 rated height of bidirectional axial ball bearing including body rings
H_4 rated height of spherical-roller bearing
Δ_{Bs} inner ring single width deviation
Δ_{Cs} outer ring single width deviation
Δ_{Ts} bearing single width deviation (total)
Δ_{T1s} cone sub-unit effective width deviation
Δ_{T2s} cup sub-unit effective width deviation
Δ_{Hs} height deviation of single direction axial bearings from nominal value
Δ_{H1s} height deviation of single direction axial ball bearings with sphered housing washer from nominal value
Δ_{H2s} height deviation of double direction axial bearings from nominal value
Δ_{H3s} height deviation of double direction axial ball bearings with sphered housing washer from nominal value
Δ_{H4s} height deviation of axial spherical-roller bearing from the rated value
C outer ring nominal width
V_{Bs} inner ring single width variation
V_{Cs} outer ring single width variation
K_{ia} radial runout of assembled bearing inner ring
K_{ea} radial runout of assembled bearing outer ring
S_i shaft washer raceway axial runout
S_e housing washer raceway axial runout
S_{ia} inner ring flat seat face axial runout of assembled bearing
S_{ea} outer ring flat seat face axial runout of assembled bearing
S_d flat seat face axial runout
S_D runout of outside cylindrical surface towards outer ring face
S_s runout of supporting face towards seat face for single row tapered roller bearings